LIGHT FIXTURE SCHEDULE:

TYPE	MANUFAC.	CATALOG #	VOLT.	LAMP TYPE	WATTS	REMARKS
A4	CURRENT powered by GE	LUSC4A0-52-V1-T35VQCSWHTE (FIXTURE) AK-LUS-A-SK-04-01/10-WHTE (STARTER KIT)	MVOLT	LED	37	4.4"Wx8"HTx4'L LED LUMINAIRE, SUSPENDED @14'-0"AFF. FIXTURES SHOWN SHADED ARE NIGHT LIGHT FIXTURES AND ARE C/W OPTION '-BA' IN SKU. STARTER KIT IS REQUIRED FOR ONLY THE 1ST LIGHT IN A STRAIGHT RUN, 2x AIRCRAFT CABLES (#93017710) FOR 1ST LIGHT, 1 CABLE PER ADDITIONAL LIGHT.
A8	CURRENT powered by GE	LUSC8A0-A0-V1-T35VQCSWHTE (FIXTURE) AK-LUS-A-SK-08-01/10-WHTE (STARTER KIT)	MVOLT	LED	75	4.4"Wx8"HTx4'L LED LUMINAIRE, SUSPENDED @14'-0"AFF. FIXTURES SHOWN SHADED ARE NIGHT LIGHT FIXTURES AND ARE C/W OPTION '-BA' IN SKU. STARTER KIT IS REQUIRED FOR ONLY THE 1ST LIGHT IN A STRAIGHT RUN, 2x AIRCRAFT CABLES (#93017710) FOR 1ST LIGHT, 1 CABLE PER ADDITIONAL LIGHT.
BA	CURRENT powered by GE	LVT-22-8-040-MM-835-VQ-LT-WHTE (FIXTURE)	MVOLT	LED	37	2' X 2' LENSED LED LIGHT TROFFER
BG	NEORAY (DEFINE 2) by COOPER	S122DW-C1005DB30-4FO-1-UDD-F-W	MVOLT	LED	43	2" X 4' LENSED WALL MOUNT LED FIXTURE. SEE DRAWING FOR MOUNTING HEIGHT.
EM	EMERGILITE	DISTINCTION SERIES REMOTE HEAD EF150-_/D-LMC	24V	(1 or 2) 6W MR16 LED	6/12	**REFER TO KEY NOTE 3 FOR MOUNTING INSTRUCTION.
G4	CURRENT powered by GE	LUSI4A0-52-V1-T35VQCSWHTE (FIXTURE) AK-LUS-A-SK-04-01/10-WHTE (STARTER KIT)	MVOLT	LED	37	4.4"Wx8"HTx4'L LED LUMINAIRE, MOUNTED IN BETWEEN JOISTS ABOVE BOTTOM CHORD OF BAR JOIST. FIXTURES SHOWN SHADED ARE NIGHT LIGHT FIXTURES AND ARE C/W OPTION '-BA' IN SKU. 2x AIRCRAFT CABLES (#93017710) FOR EACH LIGHT.
L	CURRENT powered by GE	EWS3-0-A7-D1-40-1-DKBZ	MVOLT	LED	25	LED WALL PACK AT 14'-6" AFF TO CENTRE OF FIXTURE, UNLESS NOTED OTHERWISE, DARK BRONZE FINISH. LAMP FACTORY INSTALLED.
M	CURRENT powered by GE	RCO615-835-WD-SD-CL-MR1V-10	120	LED	19	6" LED DOWNLIGHT C/W GE #93025091-FRAMER KIT, ULC LISTED FOR DAMP LOCATIONS.
S	EMERGILITE	EA SERIES EAWU - RUNNING MAN	UNIVERSAL	LED	2.5	EXIT SIGN, SEE DETAIL 4/E1.0. EXIT SIGN IS SUPPLIED STANDARD WITH TWO (2x) PICTOGRAM FILMS PER FACE. REFER TO PLAN 1/E1.0 FOR DIRECTIONAL ARROW SELECTION.
W	EMERGILITE	ESL SERIES 24ESL350/0 OR 2	UNIVERSAL	SEE REMARKS	350	EMERGENCY BATTERY UNIT WITH EITHER NONE OR 2 LAMP HEADS

1. CONTRACTOR SHALL CONTACT LIGHTING DISTRIBUTOR, GRAYBAR ELECTRIC FOR ORDERING INFORMATION. THIS IS A REQUIRED VENDOR, SEE REQUIRED VENDOR LIST ON SHEET A0.1 FOR CONTACT INFORMATION.
2. SEE PLAN FOR LENGTH AND QUANTITY OF LINEAR FIXTURES (TYPE 'A4/A8'). NOTE: 37W PER 4'-0" LENGTH.
3. ELECTRICAL CONTRACTOR TO VERIFY ALL QUANTITIES OF LIGHT FIXTURES PRIOR TO ORDERING FIXTURES.
4. FURNISH FIXTURE WITH ALL NECESSARY JOINERS, CONNECTORS, ENDCAPS, ETC FOR A COMPLETE AND CONTINUOUS FIXTURE LENGTH RUN.
5. **ALL LIGHT FIXTURES IN THIS SCHEDULE MAY NOT BE APPLICABLE TO THIS PROJECT.**
6. LIGHT FIXTURES TO BE SUPPLIED WITH 20' MOUNTING CABLES, POWER FEED CABLE AND MOUNTING BRACKETS WITH SUSPENDED KIT.
7. GE STARTER KIT (10 ROW) #93046696-WH FOR CONTINUOUS ROW FIXTURES. PROVIDE ONE (1x) STARTER KIT PER CONTINUOUS ROW.

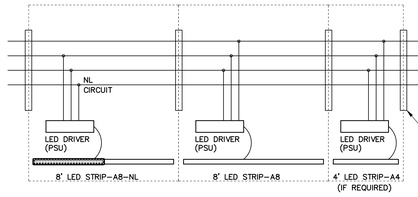

4-WIRE DROP
- BLACK = LINE #1 - SWITCHED HOT FROM EMS NATIONAL ACCOUNT VENDOR
- WHITE = NEUTRAL #1
- GREEN = COMMON GROUND
- BROWN = LINE #2 - UNSWITCHED HOT (NIGHT LIGHTS)

FIXTURE TO FIXTURE BUILT-IN CONNECTOR INCLUDING WIRING CIRCUIT CONNECTORS, CONTINUOUS CAPS, AND BRIDGE LEVERS.

VERIFY THAT ALL FIXTURE TO FIXTURE COMPONENTS SHIPPED FROM LIGHTING SUPPLIER CREATE PROPER CIRCUITING INSTALLATION AS INDICATED ON PLAN. ELECTRICAL CONTRACTOR TO PROVIDE ANY ADDITIONAL CONNECTIONS AS REQUIRED FOR A COMPLETE SYSTEM.

DESIGNER NOTE: DESIGNER TO SPECIFY IN LIGHT FIXTURE SCHEDULE OR DRAWING IF A LIGHT FIXTURE IS SUPPLIED BY ANOTHER SOURCE (EXAMPLE: NATIONAL ACCOUNT VENDOR). OWNER DELIVERED SHELL. CONTACT OWNER FOR PROPER INFORMATION.

5 SALES AREA LIGHT FIXTURE WIRING DETAIL
E1.0 NTS

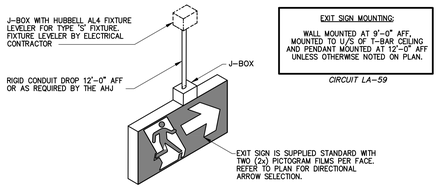

EXIT SIGN MOUNTING:

WALL MOUNTED AT 9'-0" AFF, MOUNTED TO U/S OF T-BAR CEILING AND PENDANT MOUNTED AT 12'-0" AFF UNLESS OTHERWISE NOTED ON PLAN.

CIRCUIT LA-59

4 PENDANT MOUNT EXIT SIGN
E1.0 NTS

NOTES:

1. CONTRACTOR TO PROVIDE ALL NECESSARY HARDWARE FOR INSTALLATION.
2. LIGHT FIXTURES THAT RUN PARALLEL WITH THE JOISTS SHALL REQUIRE TWO (2x) SEPARATE PIECES OF UNISTRUT, ONE AT EACH END OF LIGHT FIXTURE FOR THE AIRCRAFT CABLE HANGERS.
3. AIR CRAFT CABLE TO BE TRIMMED AFTER FIXTURE INSTALLATION.
4. VERIFY LIGHT FIXTURE AND INSTALLATION WITH PETSMART PROJECT REPRESENTATIVE (CONFIGURATION VARIES PER PROJECT).
5. CONTRACTOR TO BID GREATER THAT 10 FEET AIR CRAFT CABLE BASED ON SITE SPECIFIC CONDITIONS.
6. PROVIDE AND INSTALL SEISMIC RESTRAINT FOR LIGHT FIXTURES AS REQUIRED BY LOCAL BUILDING CODE.

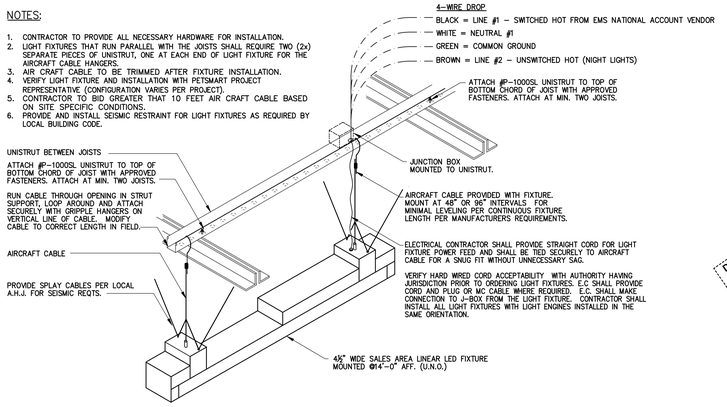

3 LIGHT FIXTURE MOUNTING DETAIL
E1.0 NTS

NOTE:

IF CONDUIT PIPING LAYOUT IS NOT SHOWN, GROUP CONDUIT/PIPE ROUTE FOR MINIMUM SUPPORTS AND HOLD TIGHT TO UNDER SIDE OF ROOF DECK. COORDINATE WITH ALL TRADES.

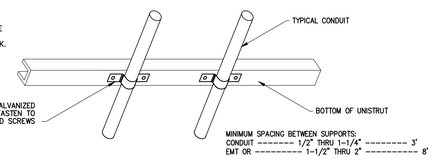

MINIMUM SPACING BETWEEN SUPPORTS:
CONDUIT -------- 1/2" THRU 1-1/4" -------- 3'
EMT OR ---------- 1-1/2" THRU 2" ---------- 8'

2 CONDUIT/PIPE SUPPORT
E1.0 NTS

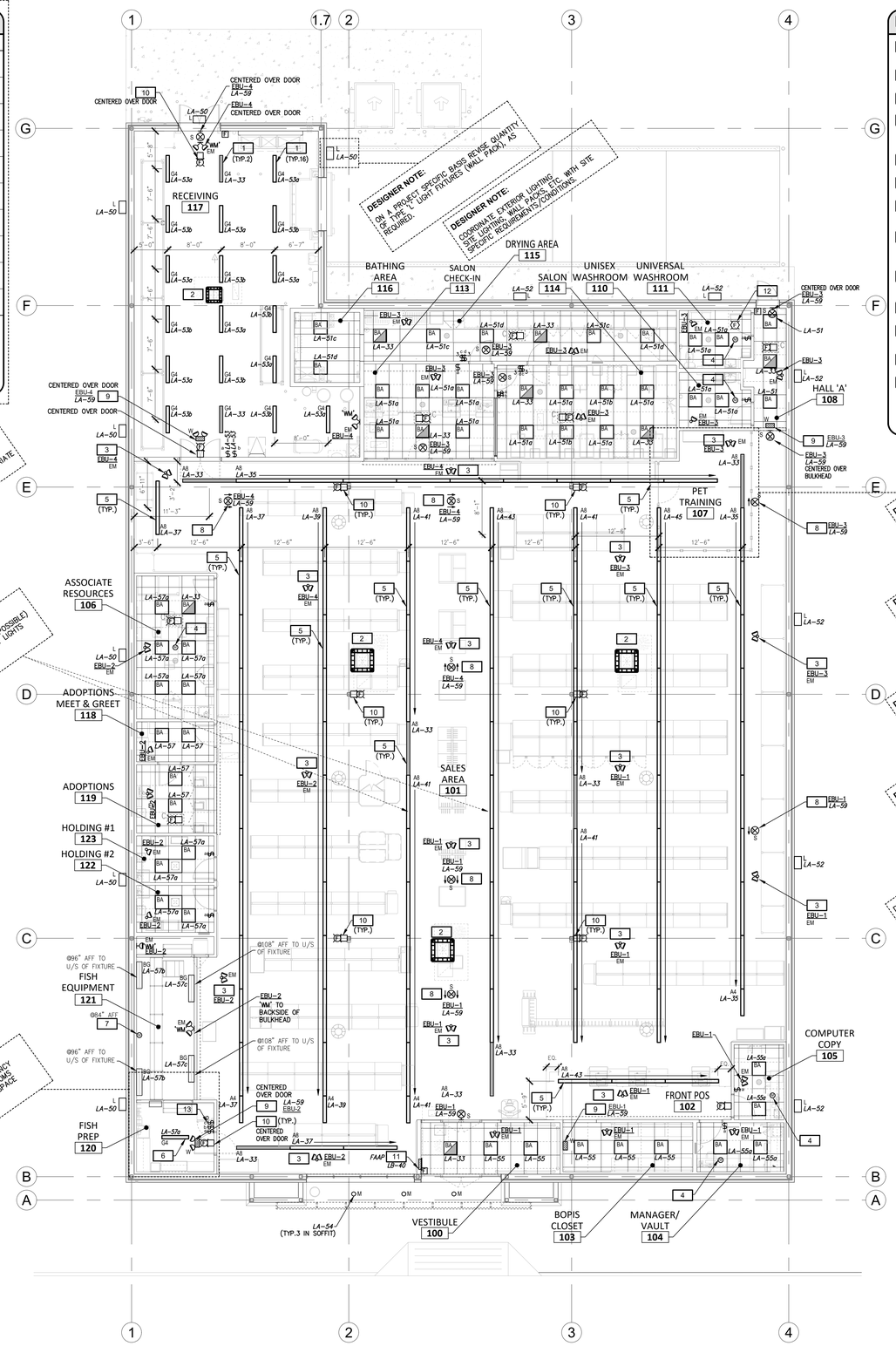

1 LIGHTING FLOOR PLAN
E1.0 SCALE: 1/8" = 1'-0"

NORTH

LIGHTING KEY NOTES:

1. RECEIVING LIGHTS: MOUNT IN BETWEEN JOISTS ABOVE BOTTOM CHORD OF BAR JOISTS & PROVIDE WITH G.E. COVER GUARD LAMPS.
2. OUTLINE OF RTU SUPPLY AIR DROP BOX SHOWN HERE TO AVOID INTERFERENCE WITH SALES/RECEIVING AREA LIGHT FIXTURES.
3. EMERGENCY FIXTURE: MOUNTED TO UNDERSIDE OF JOISTS IN OPEN CEILING AREAS TO CREATE A PATH OF EGRESS.
4. SENSOR/SWITCH SEQUENCE WIRING: ROUTE LIGHTING CIRCUIT WIRING THROUGH (1) CEILING MOUNTED OCCUPANCY SENSOR, (2) THROUGH TO WALL SWITCH, (3) THEN TO LIGHT FIXTURE FOR A COMPLETE OPERABLE LIGHTING CONTROL SYSTEM.
5. SALES FIXTURE MOUNTING: PENDANT FIXTURES MOUNTED AT 14'-0"AFF.
6. FISH AREA FIXTURE MOUNTING: PENDANT FIXTURE MOUNTED AT 10'-0" AFF, UNO.
7. PROVIDE OCCUPANCY SENSOR FOR SECONDARY CONTROL OF FIXTURES BEHIND FISH TANKS. **MOUNT SENSOR ON WALL BEHIND TANKS @84" AFF.**
8. EXIT SIGN: TO BE PENDANT MOUNTED AT 12'-0" AFF, REFER TO DETAIL 4/E1.0. EXIT SIGN IS SUPPLIED STANDARD WITH TWO (2x) PICTOGRAM FILMS PER FACE. REFER TO PLAN 1/E1.0 FOR DIRECTIONAL ARROW SELECTION.
9. BATTERY PACK (TYP. 'W', TYP. OF 4): ON WALL AT 14'-0" IN RECEIVING AND FISH, AND WALL MOUNTED ALL OTHER AREAS TIGHT TO U/S OF CEILING
10. FIRE ALARM SIGNALLING DEVICE: MOUNTED @12'-0" AFF IN SALES AND RECEIVING, AND TO U/S OF CEILING IN ALL OTHER AREAS.
11. FIRE ALARM ANNUNCIATOR PANEL: THIS CONTRACTOR IS TO MOUNT RECESSED IN VESTIBULE WALL. NO SURFACE CONDUITS PERMITTED. LOCATE PANEL AS CLOSE TO EXTERIOR WALL AS POSSIBLE.
12. PROVIDE AND INSTALL CEILING MOUNTED FIRE ALARM STROBE LIGHT IN BARRIER-FREE WASHROOM.
13. DIMMER SWITCH: PROVIDE LUTRON DVSFV-WH (OR APPROVED EQUAL), 8A, 120/277V (WHITE). CONNECT DIMMER SWITCH TO TYPE BG FIXTURES ON BACKSIDE OF BULKHEAD IN FISH AREA. DIMMER WIRES SHALL BE GRAY/VIOLET. DO NOT RUN LOW VOLTAGE DIMMING WIRES WITH LINE VOLTAGE WIRES.

DESIGNER NOTE: DESIGNER TO MAKE CERTAIN AT LEAST TWO (2x) LIGHTS SHALL REMAIN WITHIN TRAINING AREA. FIXTURE SHOULD BE LOCATED AS CLOSE TO CENTRE OF TRAINING AREA FIXTURE AS POSSIBLE.

DESIGNER NOTE: ENSURE THAT DESIGN COMPLIES WITH APPLICABLE ENERGY CODE, AND ADD ADDITIONAL SWITCHES AS REQUIRED.

DESIGNER NOTE: ON A PROJECT SPECIFIC BASIS, REVISE LIGHT FIXTURE SPACING FROM 12'-0" TO 15'-6" (LEVEL 3) FOR WIDER STORE DIMENSIONS.

DESIGNER NOTE: ENSURE THAT PROTOTYPE FOOT-CANDLE LEVELS ARE MAINTAINED IN THE MAIN SALES AREA AS PER 40 FOOT-CANDLE AVERAGE, 25 FOOT-CANDLE AVERAGE, WHICH IS 30 FOOT-CANDLE AVERAGE, AND ON THE REAR WALL 25 FOOT-CANDLE AVERAGE, WHICH IS AS NON-PROTOTYPE BUILDING IS BEING DESIGNED.

DESIGNER NOTE: ON A PROJECT SPECIFIC BASIS WHEN REQUIRED BY AHJ OR ARCH. DESIGNER, INSTALL INCORPORATE AIRCRAFT CABLE, NOTES AND DETAILS AS NECESSARY TO COMPLY WITH SEISMIC REQUIREMENTS.

CLIENT:

PETSMART
19601 North 27th Avenue
Phoenix, Arizona 85027 - (623) 580-6100

CLIENT REF #: 1234

PROJECT:

14K 2025 CANADIAN INSTRUCTION SET

FEBRUARY 12, 2025

CONSULTANT:

ARCHITECT:

SEAL:

CITY SEAL:

DISCLAIMER: COPYRIGHT:
THIS DRAWING AND DESIGN IS COPYRIGHT PROTECTED WHICH SHALL NOT BE USED, REPRODUCED OR REVISED WITHOUT WRITTEN PERMISSION BY PETSMART. THE CONTRACTOR SHALL CHECK AND VERIFY ALL DIMENSIONS AND UTILITY LOCATIONS AND REPORT ALL ERRORS AND OMISSIONS PRIOR TO COMMENCING WORK.
THIS DRAWING IS NOT TO BE SCALED.

ISSUED FOR:

NUMBER	ISSUE	DATE

PROJECT NO: CA0045686.0146
DATE: 02.12.25
ORIGINAL SCALE: AS NOTED
DESIGNED BY:
DRAWN BY:
CHECKED BY:
IF THIS BAR IS NOT 1" LONG, ADJUST YOUR PLOTTING SCALE.
1"
PAGE #: 47 OF: 53

DISCIPLINE: ELECTRICAL

TITLE: LIGHTING FLOOR PLAN

SHEET NUMBER: **E1.0**